Rewin 瑞辉

公差/General tolerances(mm)												
0 ~ 3	>3 ~ 6	>6 ~ 10	>10 ~ 18	>18 ~ 30	>30 ~ 50	>50 ~ 80	>120 ~ 180	>180 ~ 250	>250 ~ 315	>315 ~ 400	>400 ~ 500	>500
±0.12	±0.18	±0.22	±0.26	±0.31	±0.37	±0.57	±0.80	±0.93	±1.05	±1.60	±2.20	±2.50

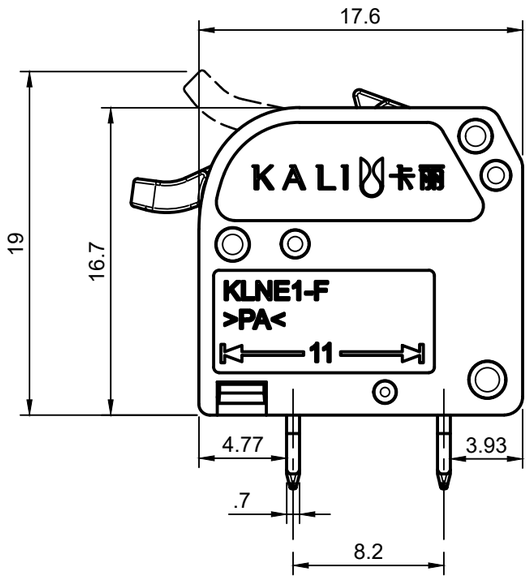

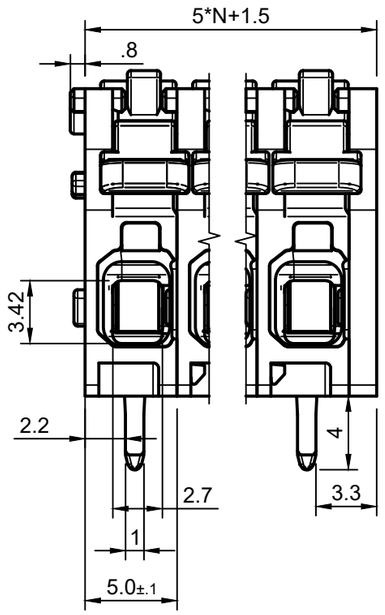

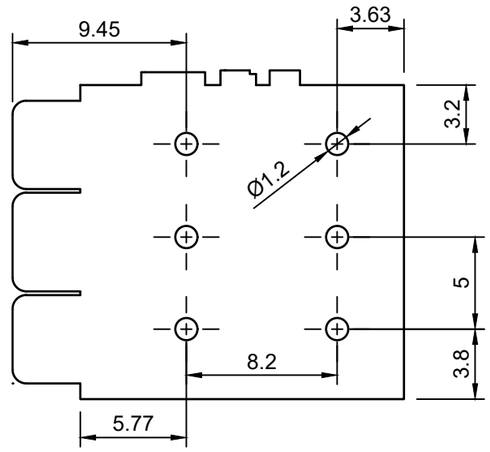

Footpoint
for information only

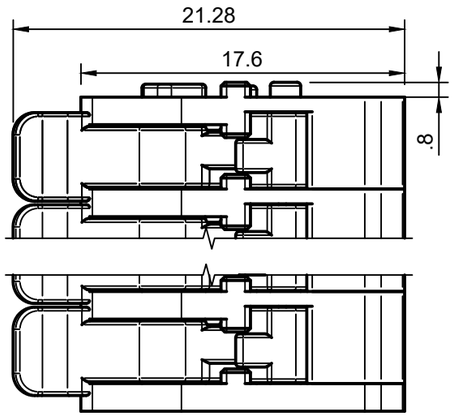

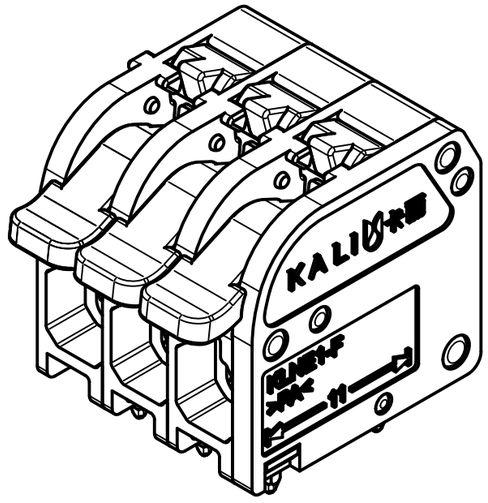

UL 标准/UL Standard	UL1059	
Use Group	B	D
额定电压/电流/Rated Voltage(V)/Current(A)	300V/20A	300V/10A
IEC 标准/IEC Standard	60664&61984	

过压类别/Overvoltage Category/污染等级/Pollution Degree	III/3	III/2	II/2
额定电压/电流/Rated Voltage(V)/Current(A)	/	400V /24A	/
额定脉冲电压（kV）/Rate Impulse Voltage(kV)	/	4kV	/
线径范围（硬线&软线）/Wire Range(rigid&flexible)(mm²/AWG)	0.5...2.5 / 20...12		
间距/Pitch(mm)/线数范围/Poles	5.0/N=1~24P		
剥线长度/Stripping length(mm)	10~12		
使用温度范围Operating temperature(℃)	-40~+85		
符合RoHS环保要求/Conform to RoHS	YES		

Transfer or duplication of this document as well as the utilization or communication of its contents are prohibited unless explicit authorization is granted. Violations will be liable for compensation.
All rights reserved for patent, utility model or designs registrations.

REV	ECN	DESCRIPTION	DRFT	DATE
V1		Stripping length	Xuhy	25.11.13

MAT NO.:
STATUS:
APPD:
CHKD:
DRFT:Nirw 25.3.10

浙江瑞辉电气有限公司
ZHEJIANG REWIN ELECTRIC CO.,LTD

NAME:
KLNE1-F-5.0-H-N-GY

DRAWING NO.: 10000048 REV V1

SIZE:A3 mm TYPR:CUSTOMER DRAWING SCALE:3:1 SHEET 1/1