Rewin 瑞辉

未注公差/General tolerances(mm)												
0 ~ 3	>3 ~ 6	>6 ~ 10	>10 ~ 18	>18 ~ 30	>30 ~ 50	>50 ~ 80	>120 ~ 180	>180 ~ 250	>250 ~ 315	>315 ~ 400	>400 ~ 500	>500
±0.12	±0.18	±0.22	±0.26	±0.31	±0.37	±0.57	±0.80	±0.93	±1.05	±1.60	±2.20	±2.50

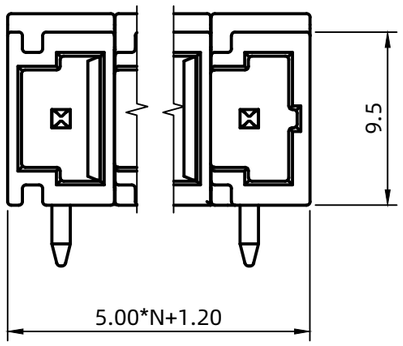

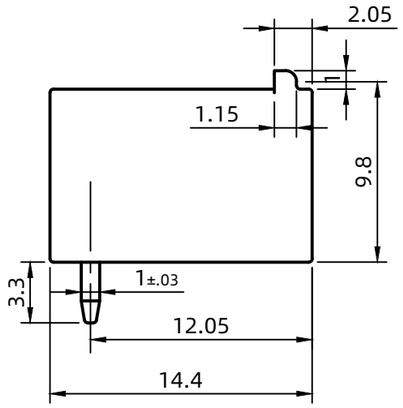

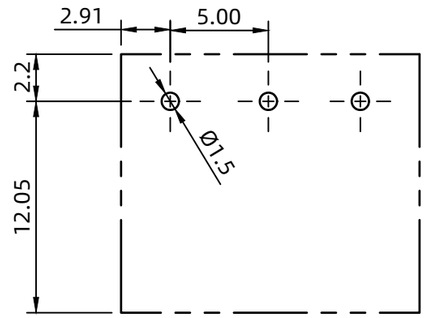

Footpoint
for information only

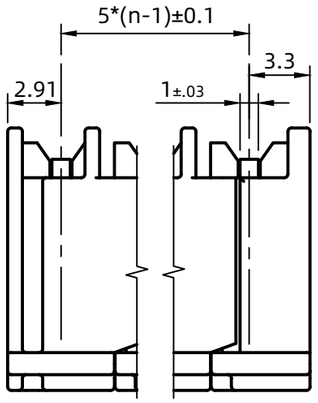

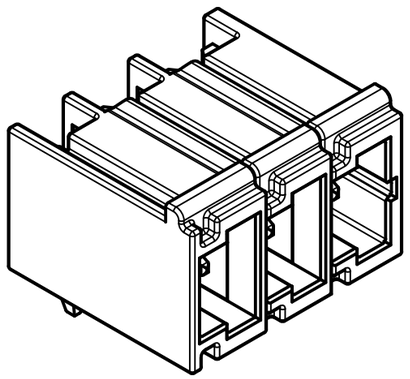

UL 标准/UL Standard	UL 1059
Use Group	B / D
额定电压/电流/Rated Voltage(V)/Current(A)	300V /16A / 300V /16A
IEC 标准/IEC Standard	61984
过压类别/Overvoltage Category/污染等级/Pollution Degree	III/2
额定电压/电流/Rated Voltage(V)/Current(A)	320V/16A
额定脉冲电压（kV）/Rate Impulse Voltage(kV)	4kV
间距/Pitch(mm)/线数范围/Poles	5.0/N=2~12P
使用温度范围Operating temperature(℃)	-40~+85
符合RoHS环保要求/Conform to RoHS	YES

Transfer or duplication of this document as well as the utilization or communication of its contents are prohibited unless explicit authorization is granted. Violations will be liable for compensation. All rights reserved for patent, utility model or designs registrations.

REV	ECN	DESCRIPTION	DRFT	DATE
V1		NAME/UL/IEC	Nirw	25.3.4

MAT NO.:
STATUS:
APPD:
CHKD:
DRFT:Nirw 2024.4.28
SIZE:A3 mm

浙江瑞辉电气有限公司
ZHEJIANG REWIN ELECTRIC CO.,LTD

NAME:
KLNE1-S-5.00-H-N-GY

DRAWING NO.: 10000044 REV V1
TYPR:CUSTOMER DRAWING SCALE:3:1 SHEET 1 / 1